REV.	DESCRIPTION	DATE
A	RELEASE	Jul.11, 2019
B	N19'11003	Nov.04, 2019
C	N20'09007	Sep.23, 2020

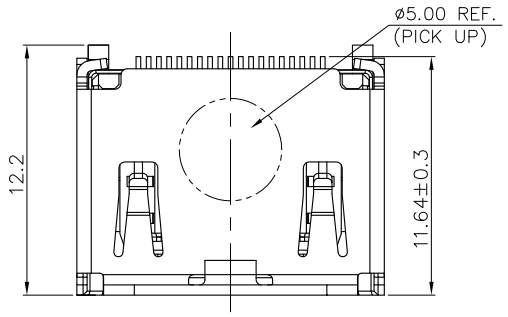

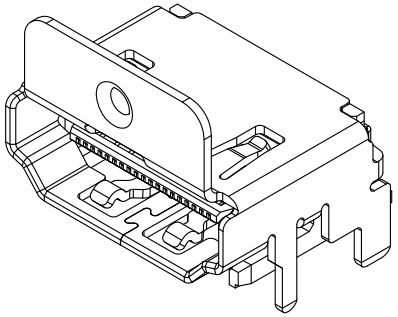

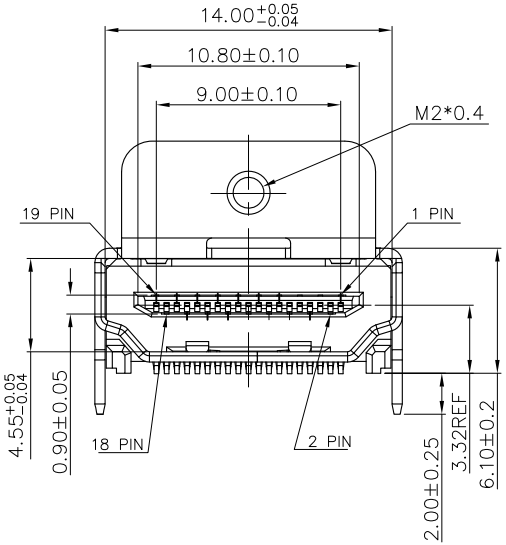

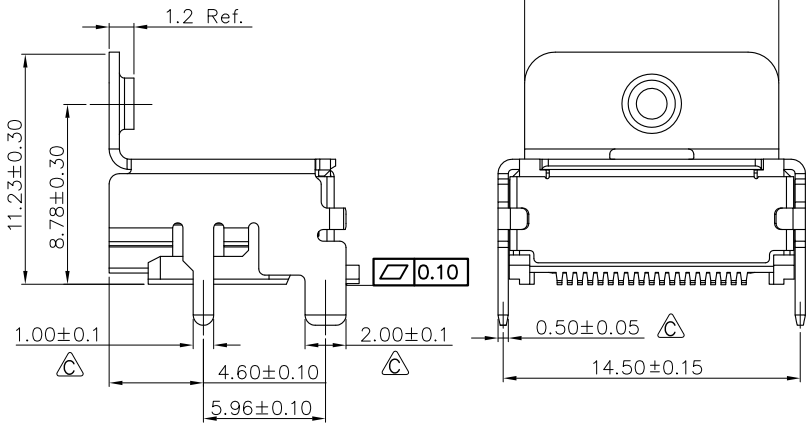

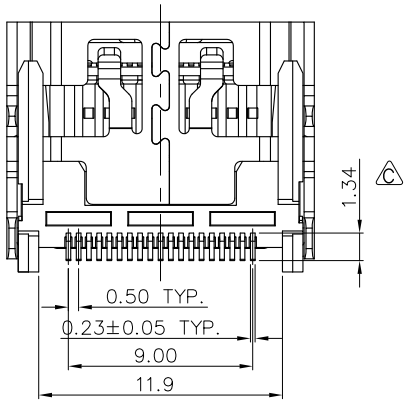

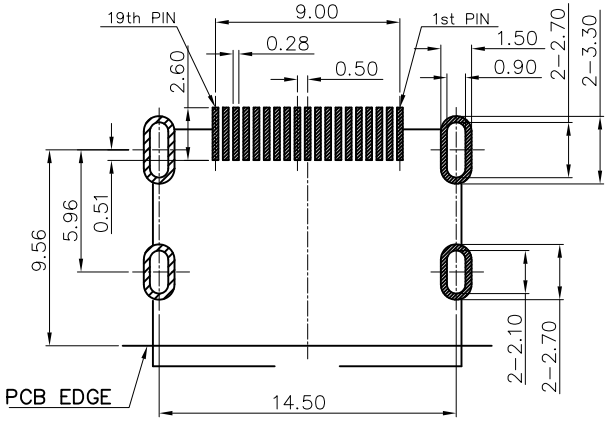

RECOMMEND PCB LAYOUT
TOLERANCE: ±0.05
TOP VIEW

MATERIALS

1. HOUSING : LCP (UL 94V-0), BLACK. Ⓒ
2. TERMINAL : BRASS,
   PLATING : GOLD PLATED ON CONTACT AREA,
   TIN PLATED ON SOLDER TAILS.
3. SHELL : BRASS, Ⓒ
   PLATING : NICKEL PLATED OVERALL.
4. EMI SHIELD : STEEL.

SPECIFICATION

1. CURRENT RATING : 0.5 A. MAX.
2. DIELECTRIC WITHSTANDING VOLTAGE :
   500V AC R.M.S. FOR 1 MINUTE.
3. INSULATION RESISTANCE : 100MΩ MIN.AT 500V DC.
4. CONTACT RESISTANCE : 30mΩ MAX.
5. OPERATING TEMPERATURE : -25℃ TO +85℃.
6. INSERTION FORCE : 4.5Kgf MAX.
7. WITHDRAWING FORCE : 1Kgf ~ 4Kgf.

PART NUMBER INFORMATION :

369FA19-XN034D-H

- 369 — SERIES CODE
- F — SMT
- A — FEMALE
- 19 — NUMBER OF POSITIONS
- XN — PLATING SEE TABLE
- 034 — FOLLOW NUMBER
- D — H: HALOGEN FREE
- H

DESCRIPTION OF PLATING ON TERMINALS			
NO.	EXPLAIN	NO.	EXPLAIN
0	GOLD FLASH	3	GOLD 15u"
6	GOLD 30u"		

TOLERANCE .0=±0.25 .00=±0.15 .000=±0.05 ANG.=±3°	DRAWER Chen CHECK Stony APP'D Stony	Astron ASTRON TECHNOLOGY CORP.
UNITS : mm	PRODUCT SPEC. —	NAME HDMI A 2.1 TYPE FEMALE WITH FLANGE (H=8.78)
SCALE NONE / SIZE A7 / SHEET 1 OF 2 / REV. C		DRAW NO. 369FA19-XN034D-H

DRAWING NAME: R

REV.	DESCRIPTION	DATE
A	RELEASE	Jul.11, 2019
B	N19'11003	Nov.04, 2019
C	N20'09007	Sep.23, 2020

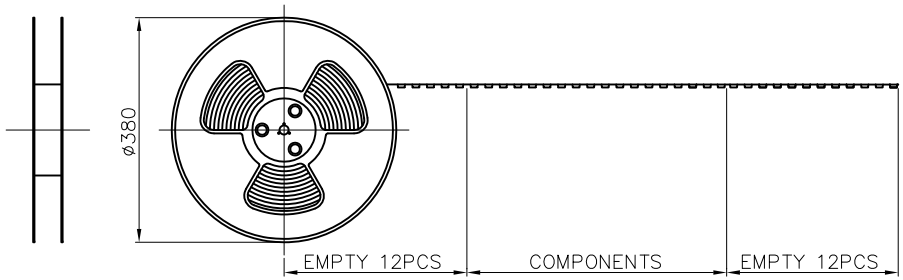

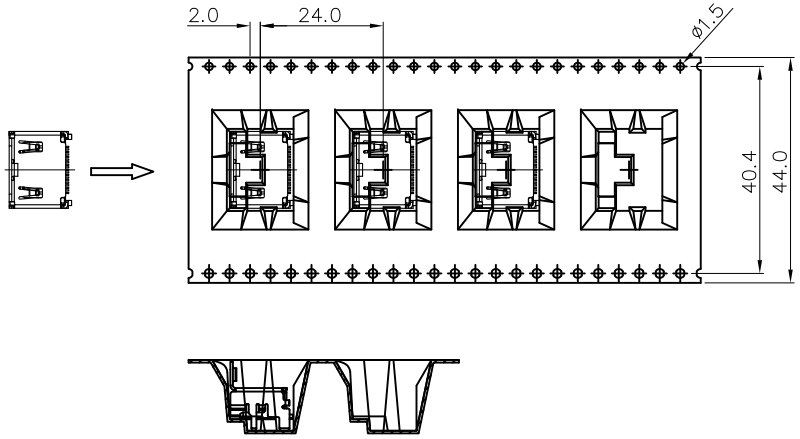

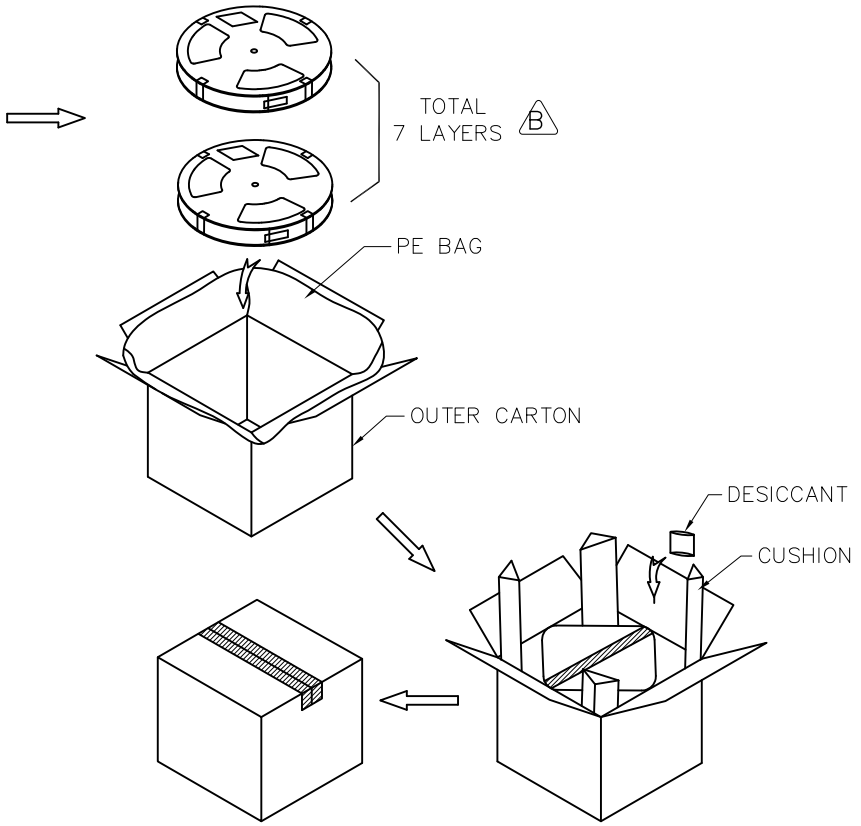

PACKAGE :

1. CORTON SIZE: 400x400x380mm (LxWxH)
2. 250 PCS/REEL
3. (B) 7 REEL/CARTON = 1750PCS

TOLERANCE .0=±0.25 .00=±0.15 .000=±0.05 ANG.=±3°	DRAWER Chen CHECK Stony APP'D Stony PRODUCT SPEC. —	Astron ASTRON TECHNOLOGY CORP. NAME HDMI A 2.1 TYPE FEMALE WITH FLANGE (H=8.78)
UNITS : mm		DRAW NO. 369FA19-XN034D-H
SCALE NONE / SIZE A7	SHEET 2 OF 2 / REV. C	

DRAWING NAME: R